Personal Computer Hardware Reference Library

512KB Memory Expansion Option

Contents

Description 1
Memory Cycles 1
Memory Address Switches 1
I/O Channel Check 3
Specifications 3
Voltage Tolerances 3
Power Dissipation 3
Temperature Variation 3
Logic Diagrams 5

Notes:

Description

The IBM Personal Computer AT 512Kb Memory Expansion option has 36 RAM modules (128Kb x 1) for a total capacity of 512Kb.

Memory Cycles

Memory read and write commands require a 1-wait-state, 3-clock memory cycle. Data moves as a byte (8 data bits and 1 parity bit) or as a word (16 data bits and 2 parity bits) and is parity-checked on the adapter. A parity error causes an I/O channel check (non-maskable interrupt) to the system.

Memory Address Switches

There are two banks of memory address switches on each memory adapter. These switches are set to values for the first, second, third, etc. memory adapter in the system.

The first memory expansion adapter must start at address space hex 100000. If more than one adapter is installed, no gaps between memory are allowed. All expansion memory must be one contiguous block starting at address hex 100000.

The figure on the following page shows the switch settings for each adapter.

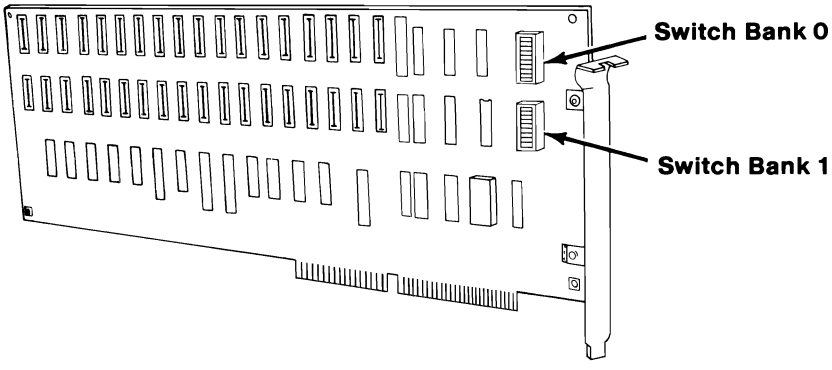
Switch Bank 0
Switch Bank 1

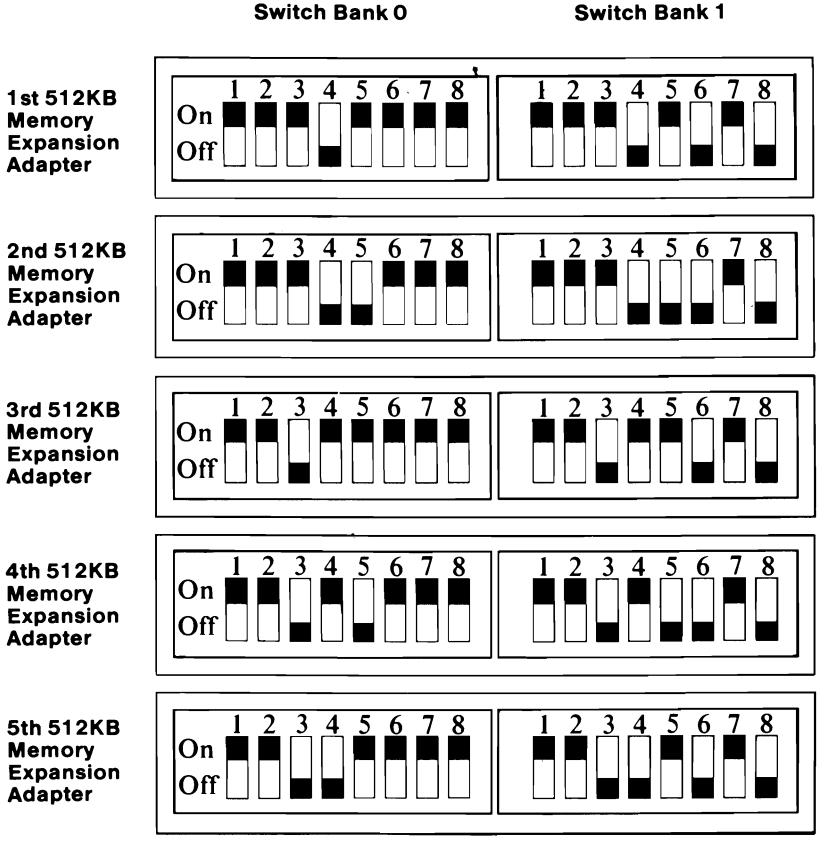
Switch Bank 0
Switch Bank 1
1st 512KB Memory Expansion Adapter
2nd 512KB Memory Expansion Adapter
3rd 512KB Memory Expansion Adapter
4th 512KB Memory Expansion Adapter
5th 512KB Memory Expansion Adapter
On
Off
1 2 3 4 5 6 7 8

I/O Channel Check

When the I/O channel check occurs, a non-maskable interrupt (NMI) results. Bits 6 and 7 of hex address 0061 are the status bits used to determine the source of the NMI (bit 6 is I/O channel check, and bit 7 is system board parity check). Writing to the failing card will clear the status bit.

Specifications

Voltage Tolerances

The maximum variation of the +5 Vdc is ±5% at the adapter pins.

Power Dissipation

The +5 Vdc power used by the adapter is a maximum of 5.25 watts, and the maximum current used is 1 ampere.

Temperature Variation

The adapter will operate between 10 and 50 degrees Celsius (50 and 122 degrees Fahrenheit).

Notes:

Logic Diagrams

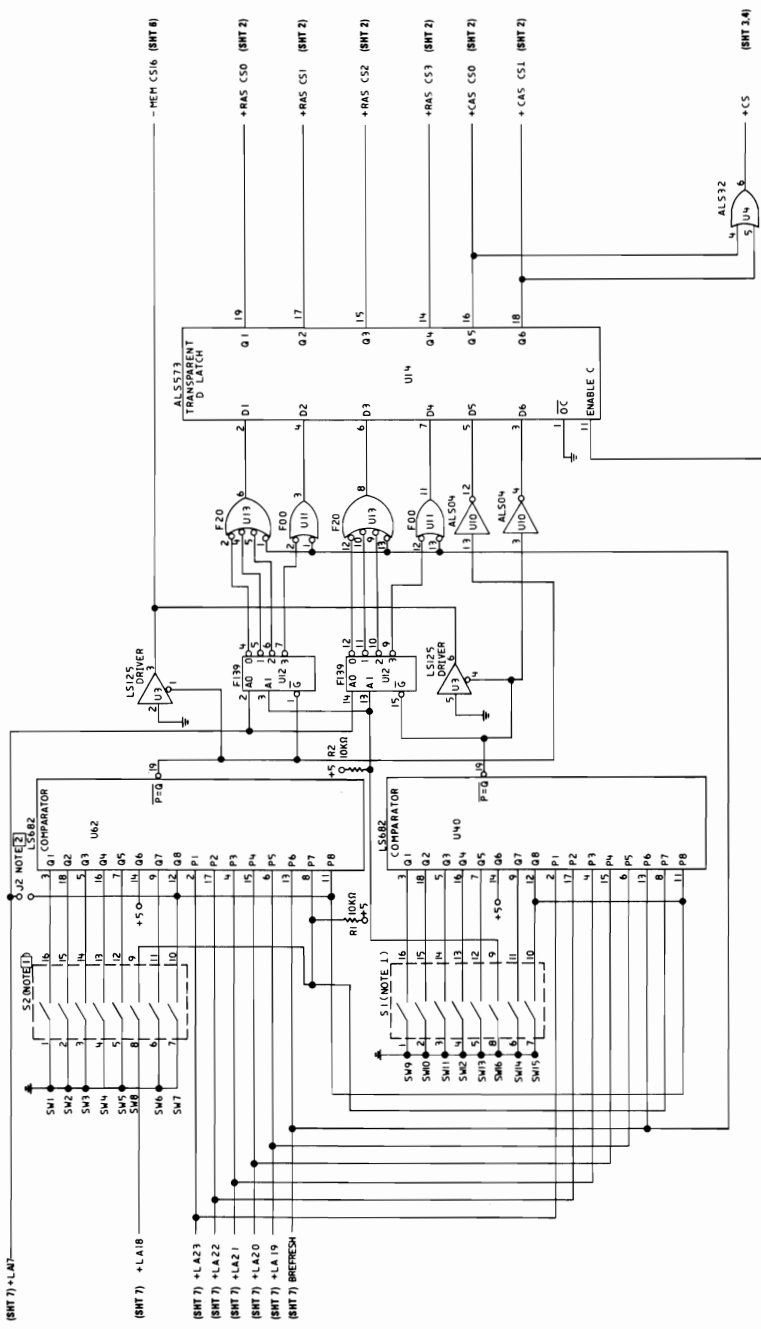

512 KB Memory Expansion Option (Sheet 1 of 8)

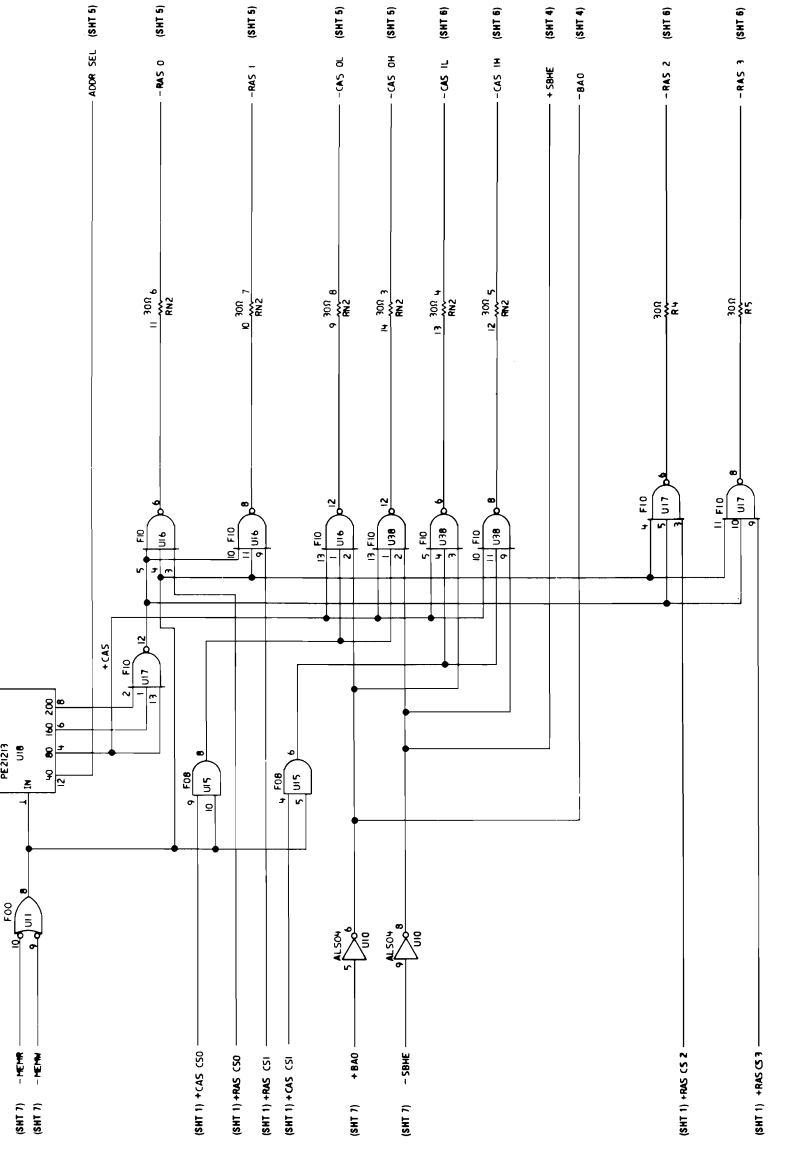

512 KB Memory Expansion Option (Sheet 2 of 8)

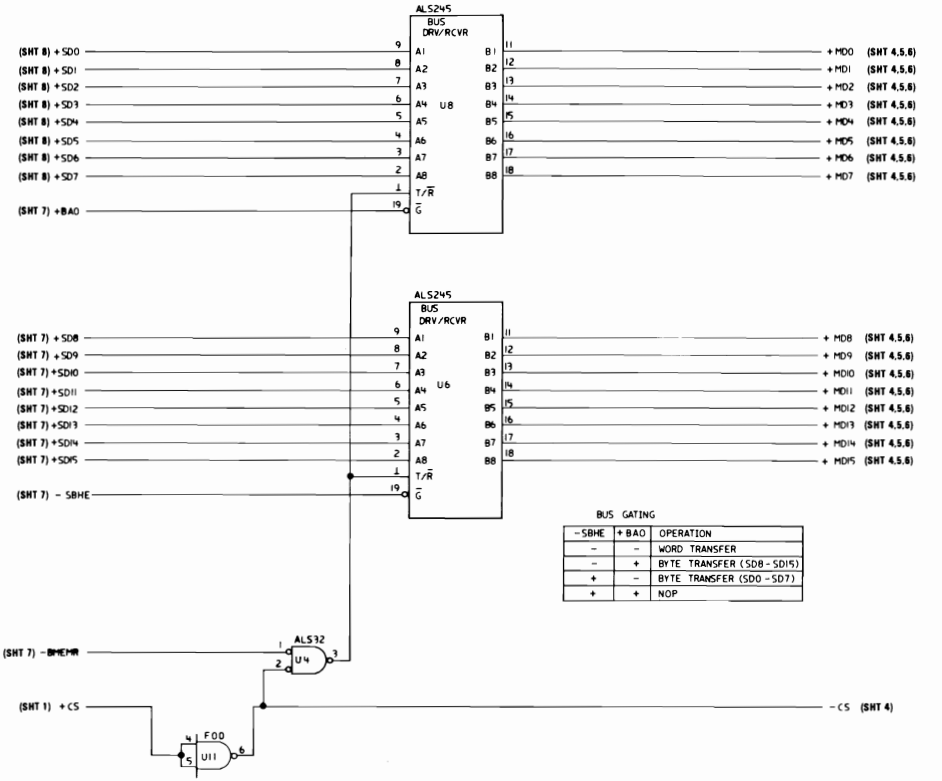

512 KB Memory Expansion Option (Sheet 3 of 8)

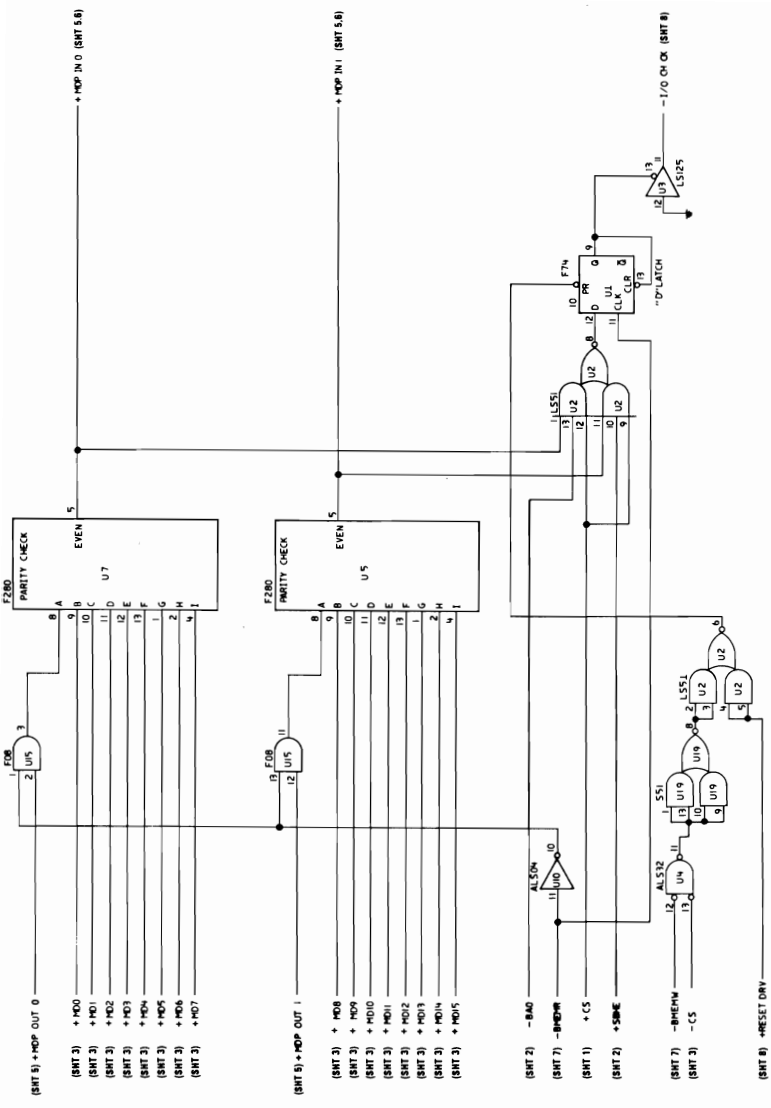

512 KB Memory Expansion Option (Sheet 4 of 8)

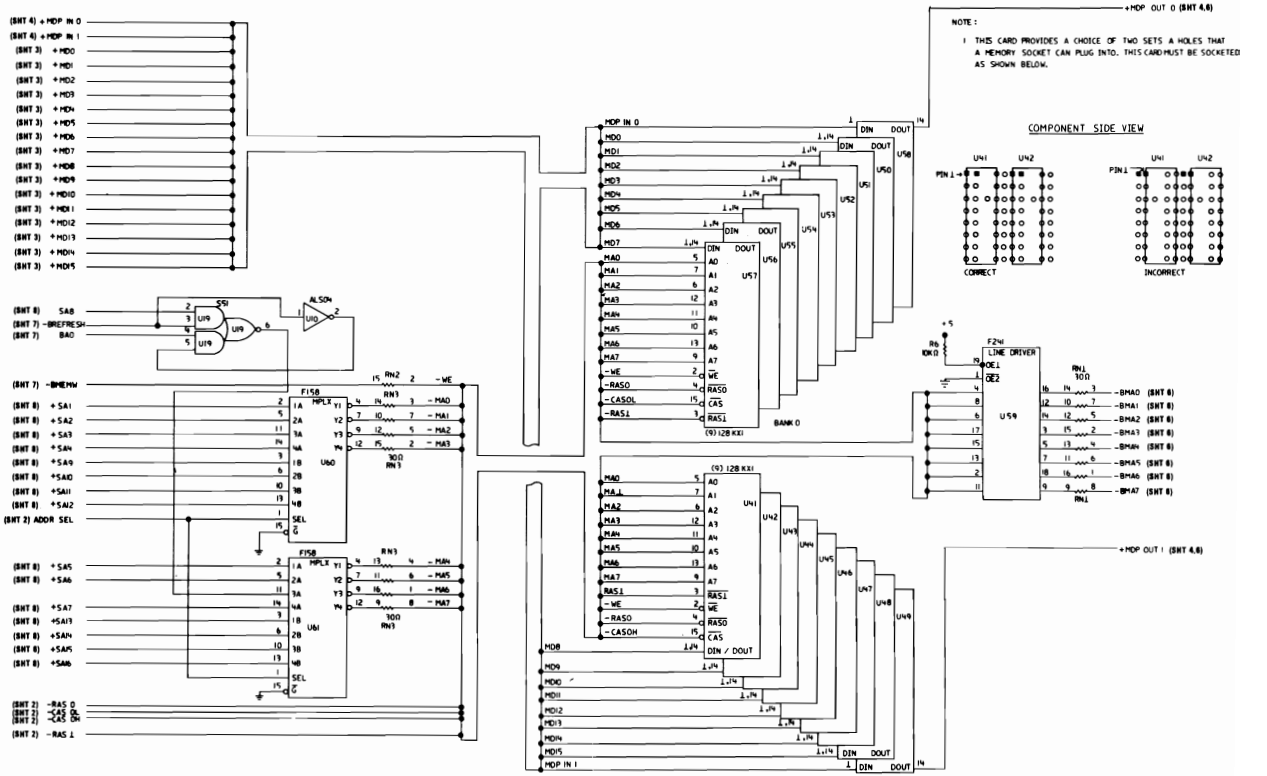

512 KB Memory Expansion Option (Sheet 5 of 8)

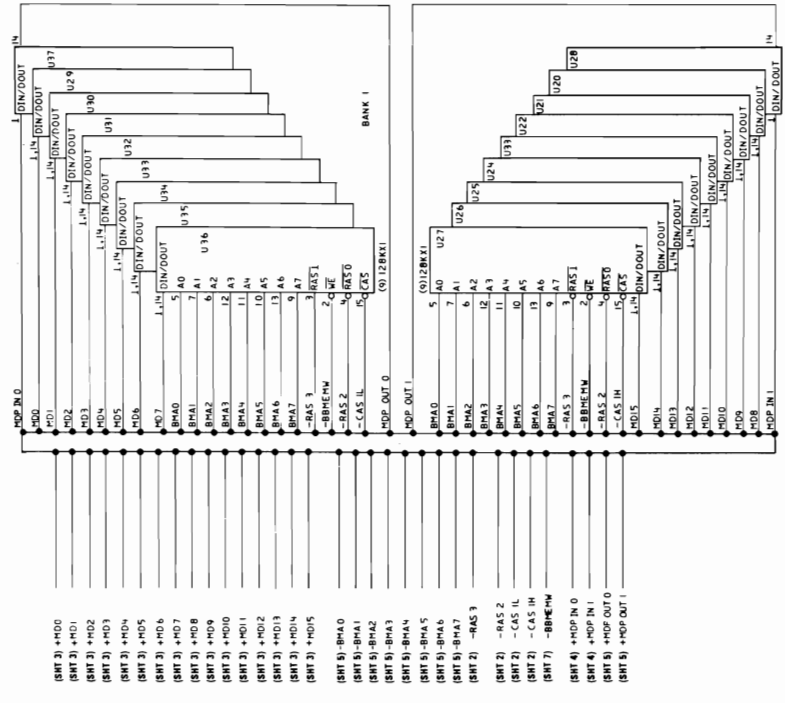

512 KB Memory Expansion Option (Sheet 6 of 8)

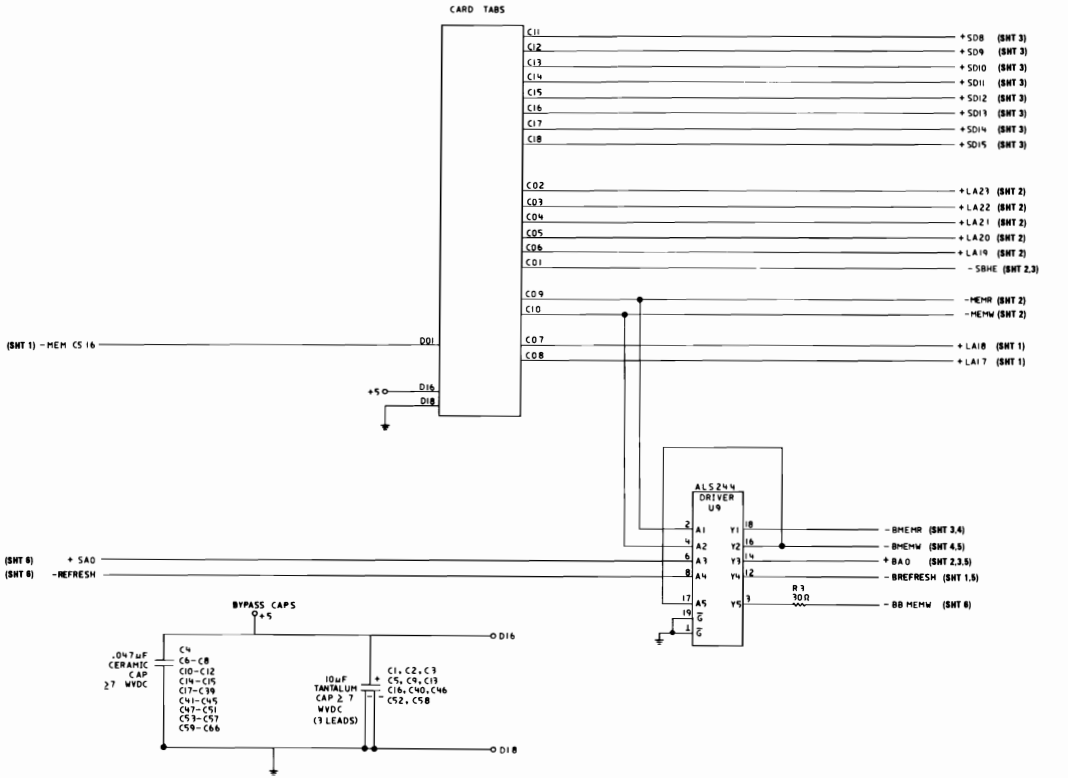

512 KB Memory Expansion Option (Sheet 7 of 8)

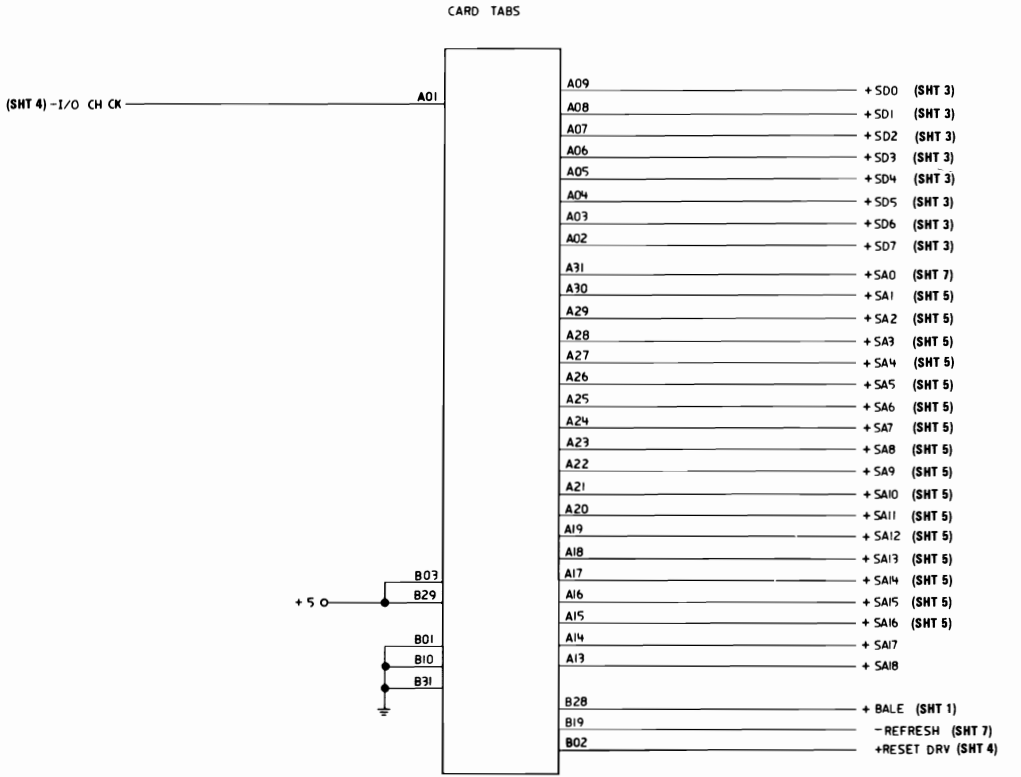

512 KB Memory Expansion Option (Sheet 8 of 8)